VS Low Ambient Fan Cycling Control Installation Instructions

1. Low Ambient Fan Cycling Control wire identification:

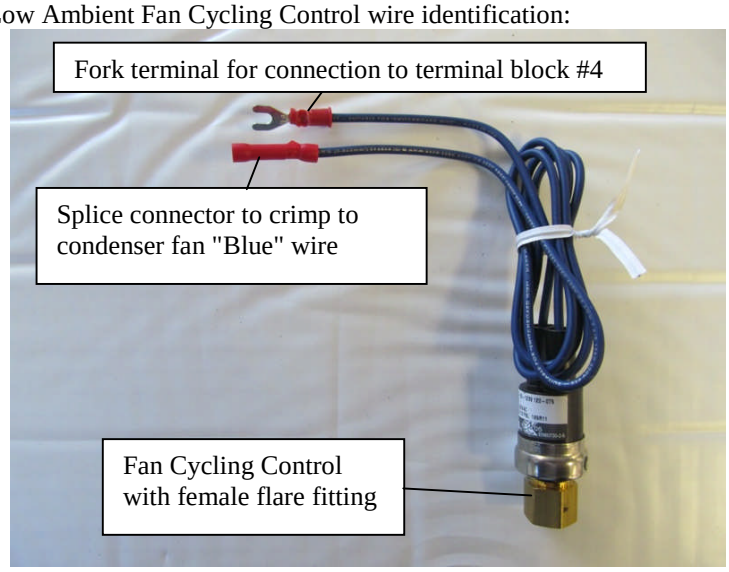

2. Disconnect all power from unit.
3. The unit housing is assembled using #2 Phillips head screws.
4. For units with a front grill: remove screws holding front grill. Pull the selector knob off of the fan speed control and remove the grill.
5. For units with a front duct hood kit, remove both top and bottom duct hoods.
6. Remove wall mounting brackets and outdoor cover if applicable.
7. Remove top cover. Lift the cover up to remove from unit.
8. Remove all foil tape blue insulating foam from the condenser side (rear half) of the unit.
9. Locate the discharge line 1/4" access valve and remove the threaded cap.
10. Install the Fan Cycling Control as shown:

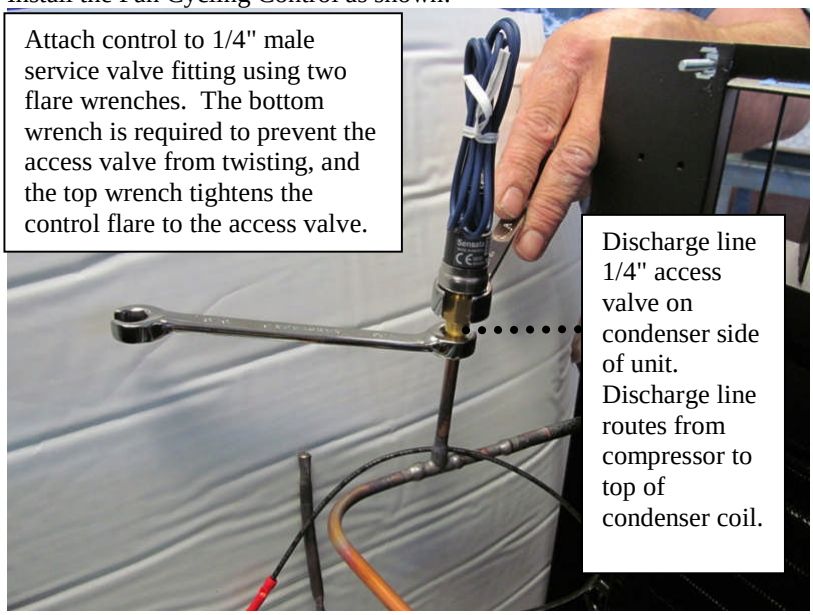

11. See following pages for detailed wiring instructions.
12. When wiring is complete and control function is verified, replace all insulating foam and seal all seams with foil tape.
13. Replace housing sheet metal and put unit into service.

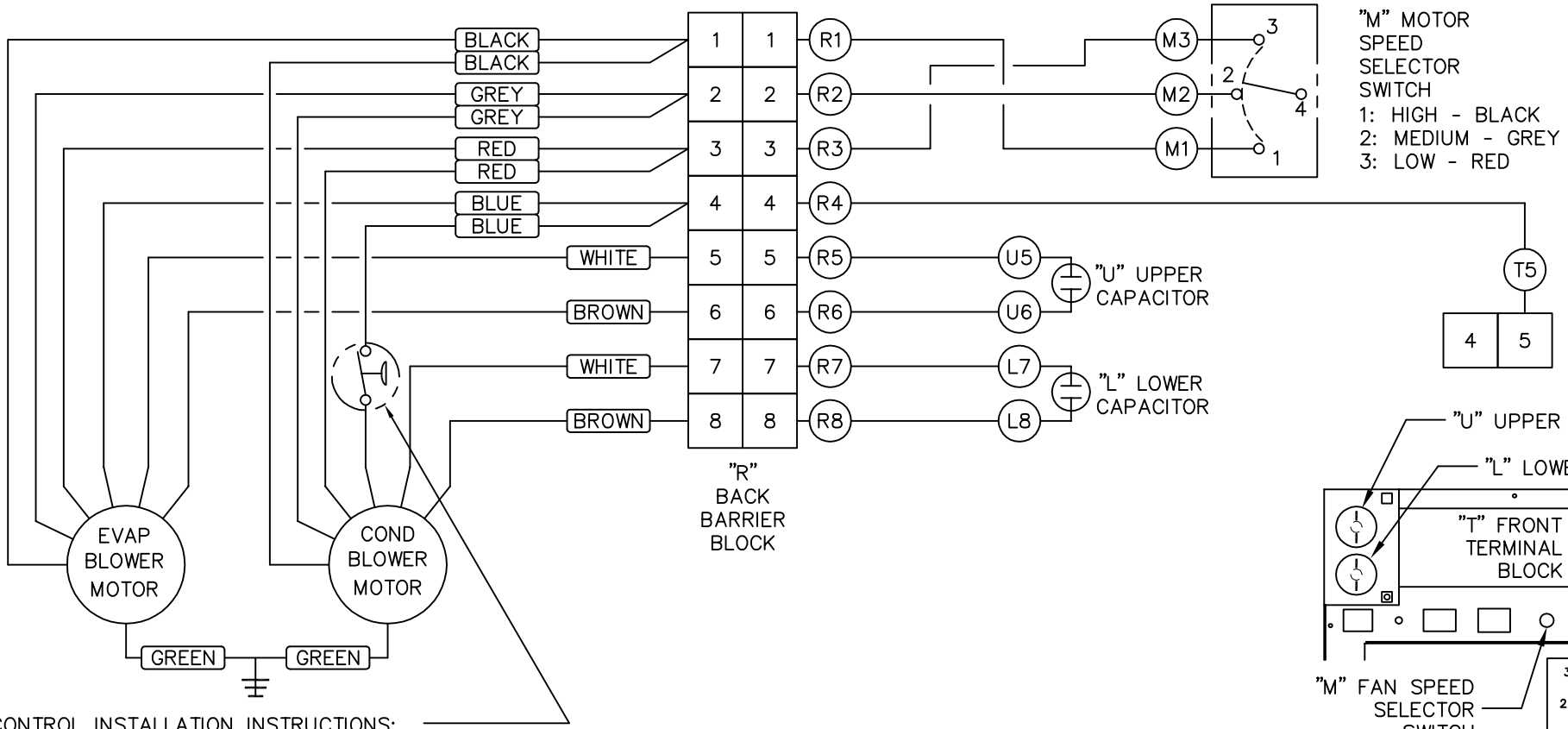

CONTROL INSTALLATION INSTRUCTIONS:

1. DISCONNECT ALL POWER FROM UNIT, REMOVE COVER AND BLUE FOAM FROM CONDENSER SIDE OF UNIT.
2. INSTALL THE CONTROL INTO THE 1/4" ACCESS VALVE ON THE DISCHARGE LINE (SEE INSTALLATION DIAGRAM).
3. LOCATE THE BLUE WIRE FROM THE CONDENSER FAN MOTOR. DISCONNECT ONLY THE CONDENSER FAN BLUE WIRE FROM THE TERMINAL BLOCK.
4. CONNECT THE LEAD FROM CONTROL WITH THE FORK CONNECTOR INTO THE SAME TERMINAL THAT THE BLUE WIRE WAS CONNECTED TO, TERMINAL #4.
5. SPLICE THE OTHER LEAD OF THE CONTROL INTO THE BLUE WIRE USING THE PROVIDED WIRE CRIMP SPLICE.
6. USING CAUTION, RECONNECT POWER TO UNIT AND VERIFY CONTROL OPERATION: CONDENSER FAN CUT IN @ 120PSIG, CUT OUT @ 75PSIG. NOTE: IF TESTING IN A COOL AMBIENT (APPROX. 75°F), THERE WILL BE A SHORT DELAY BEFORE THE CONDENSER FAN ENERGIZES.
7. REPLACE AND SEAL ALL BLUE FOAM, COVER, AND PUT UNIT INTO SERVICE.

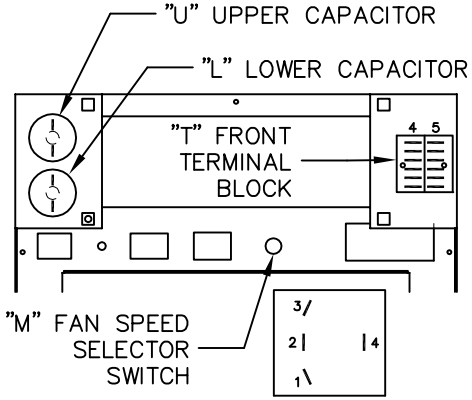

FRONT INSIDE VIEW

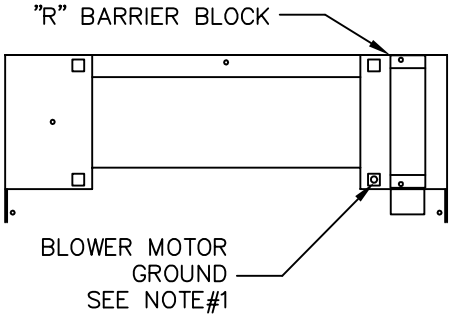

BACK INSIDE VIEW

VS LOW AMBIENT FAN CYCLING CONTROL INSTALLATION INSTRUCTIONS

1028LR00
SHT 2 OF 4

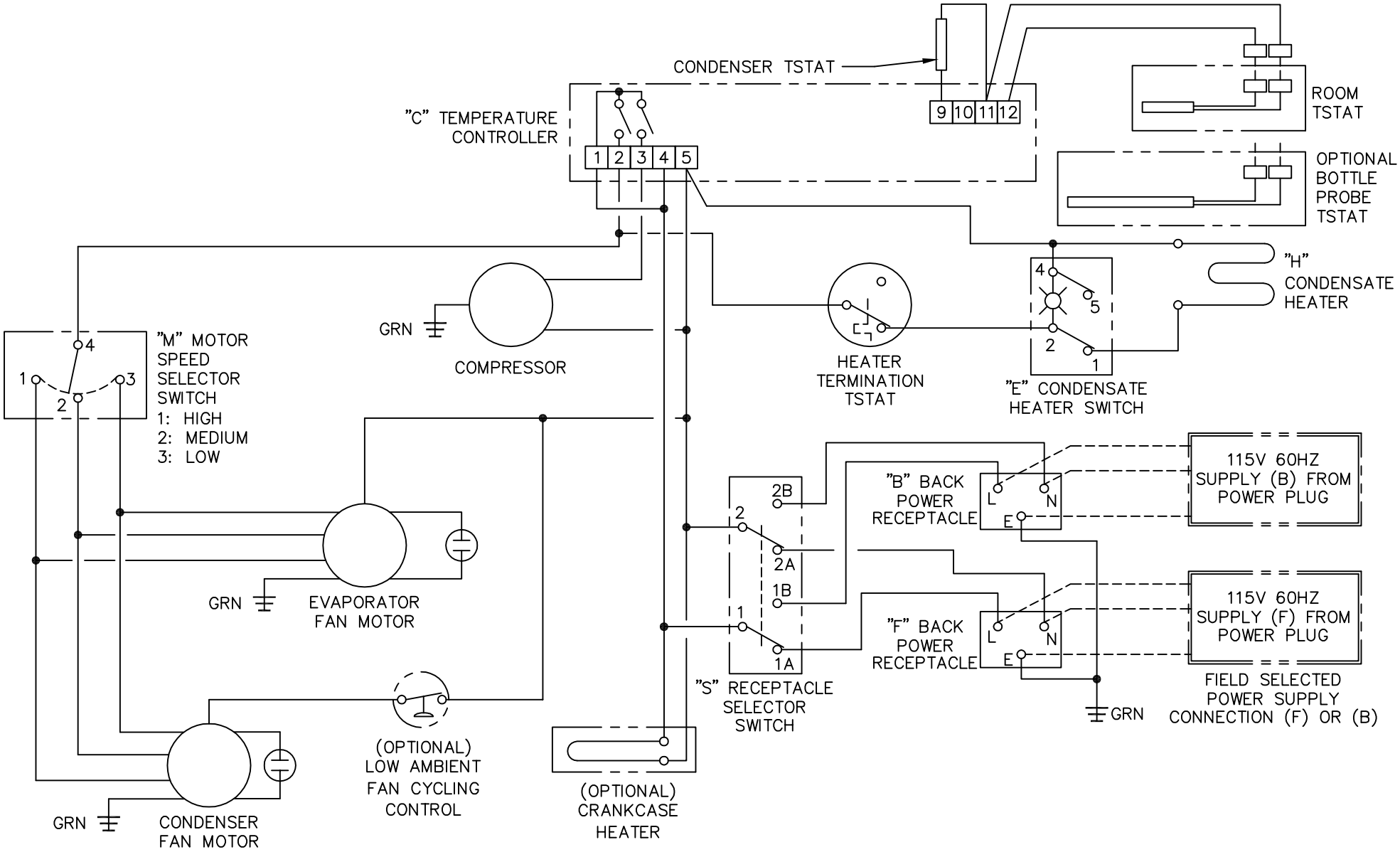

VS WIRING SCHEMATIC - STANDARD CONTROLLER

1028LR00
SHT 3 OF 4

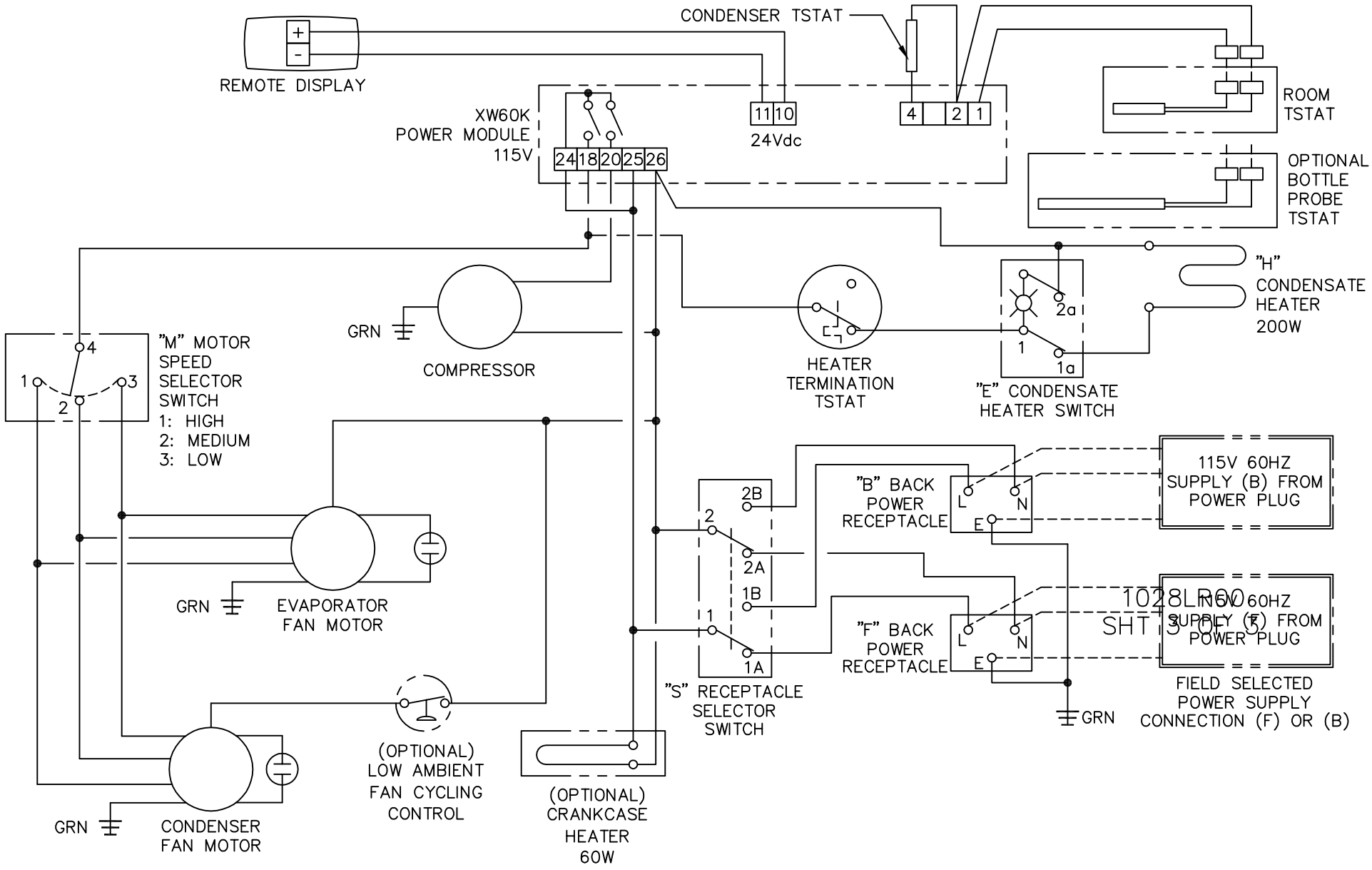

VS WIRING SCHEMATIC - REMOTE DISPLAY CONTROLLER

1028LR00
SHT 4 OF 4